ROHS

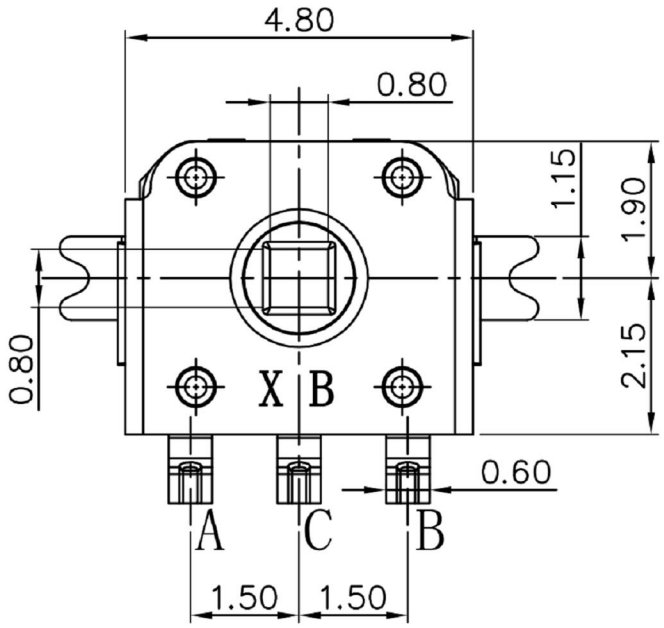

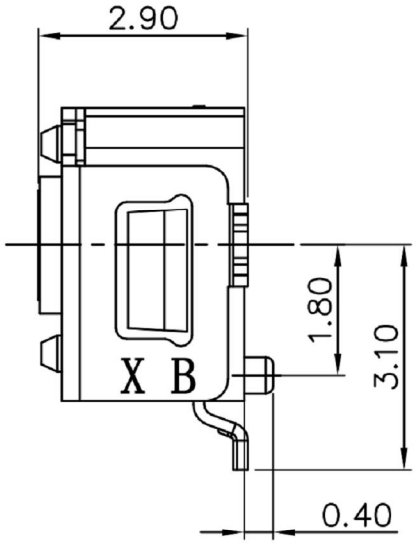

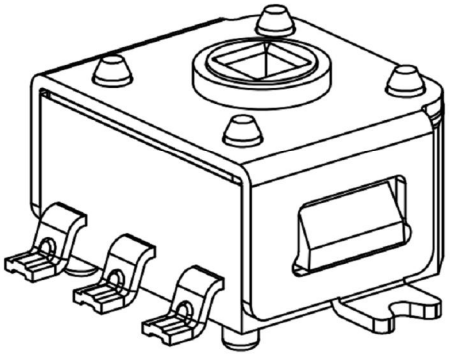

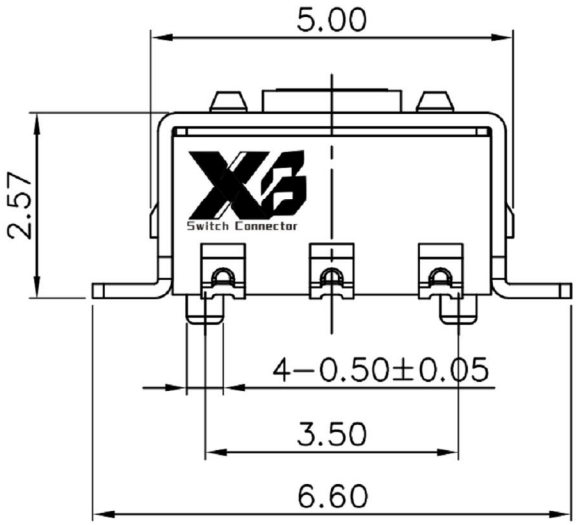

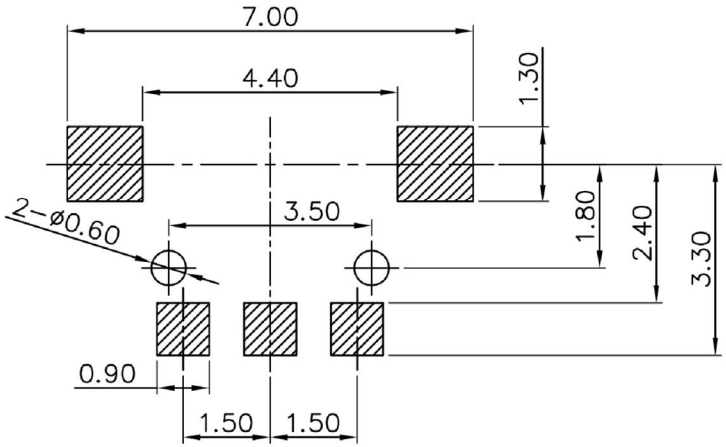

P.C.B MOUNTING DETAIL

分解能力

CC点数	脉冲数
12	6
12	12

气候等级 Climate grade	额定值 Rated values	接触电阻 Contact resistance	耐 压 Dielectric strength	绝缘电阻 Insulation resistance	按压力 Operating force	行 程 Travel	寿 命 Life
-30℃~+85℃	Max50 mA12V DC Min10 μA12V DC	≤50mΩ	100V.AC.1Min	≥100MΩ	10gf±5gf	0.15±0.05	100000次

ITEM NO.	DESCRIPTION	DRAWN	DATE

东莞市溪榜电子有限公司
Switch Connector DONG GUAN XI BANG ELECTRONICS CO.,LTD

TOLERANCE UNLESS OTHERWISE STATED: Up to 5 ±0.2; Above 5 ~ 15 ±0.3; Above 15 ~ 30 ±0.4; Above 30 ~ 50 ±0.5; Angle ±0.3°

3RD. ANGEL'S | UNITS MM

DRAWN BY: GAO. PENG	DATE 02/24/23	MAT'L		TITLE	ENCODER
CHECKED BY: PANG. DONG	DATE 02/24/23	FINISH		MODLE	贴片旋转编码开关
APPROVED BY: YANG. JUN	DATE 02/24/23	SCALE	1 : 1	DWG NO.	XB-EN-06
		SHEET NO.	1 of 1	PART NO.	4.8x2.57x4.05

SIZE A4 VER R