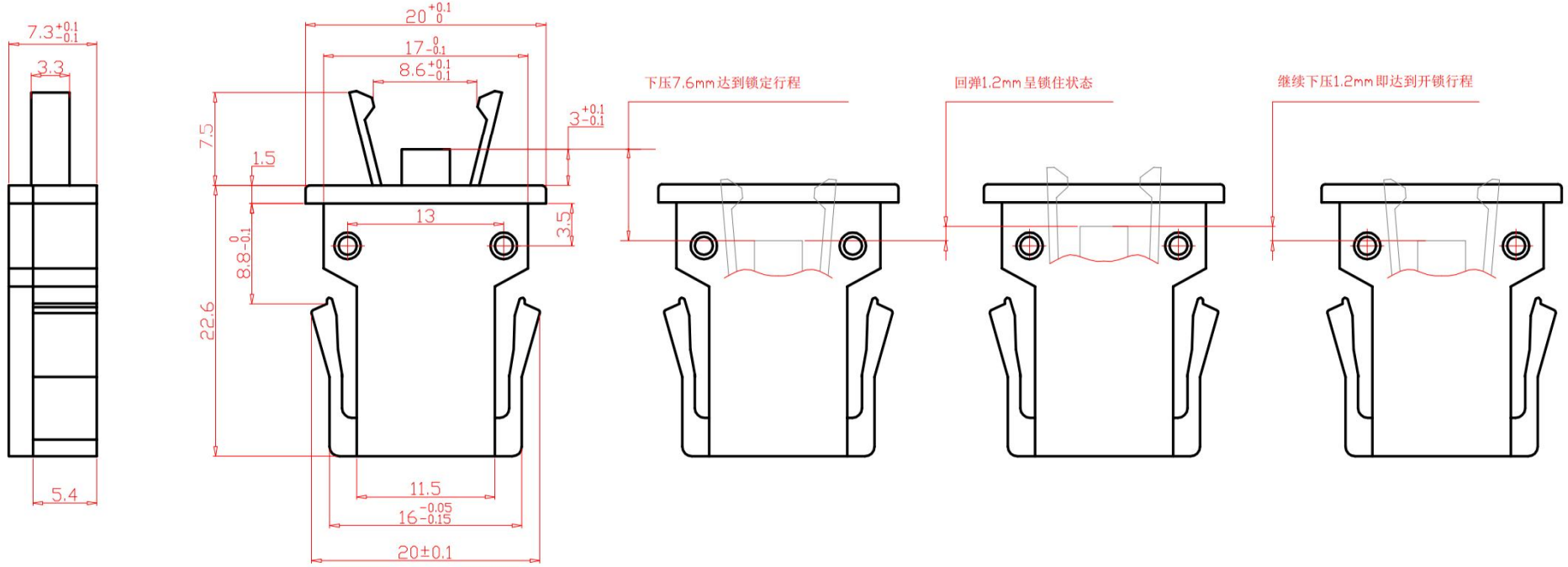

材料 1：壳 ABS
2：盖 PC
2：脚 POM

寿命：2万次

脱钩力5.5 +0.5 -0.5 N

注：未标公差的尺寸公差为±0.05mm

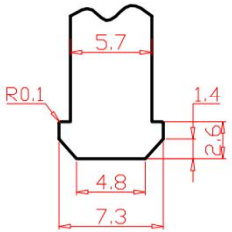

锁舌参考规格

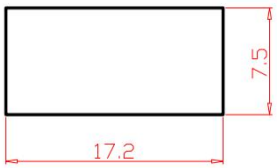

安装孔参考规格

UNLESS OTHERWISE SPECIFIED: DIMENSIONS ARE IN MILLIMETERS SURFACE FINISH: TOLERANCES: LINEAR: ANGULAR:	FINISH:			DEBUR AND BREAK SHARP EDGES	DO NOT SCALE DRAWING / REVISION
	NAME	SIGNATURE	DATE		东莞市溪榜电子有限公司
DRAWN			2016/3		
CHK'D					
APPV'D					
MFG					
Q.A				MATERIAL:	DWG NO. PR-3 门锁 A4
				WEIGHT:	SCALE:1:1 SHEET 1 OF 1