ROHS

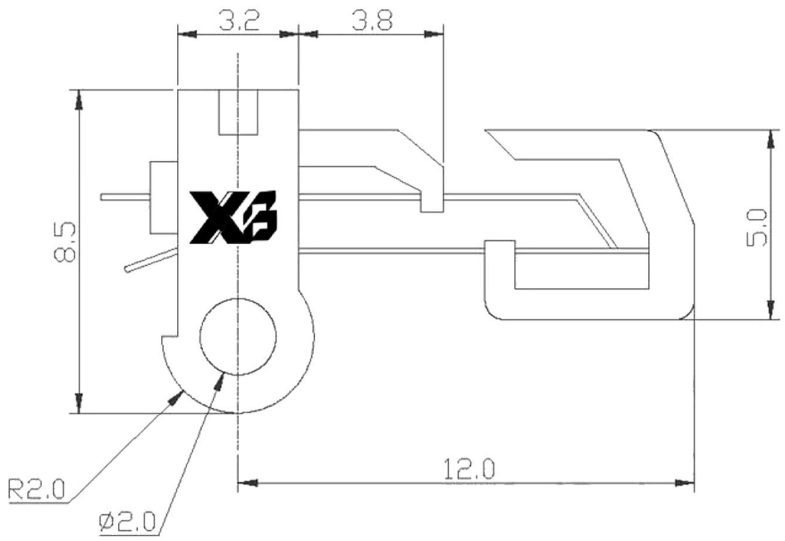

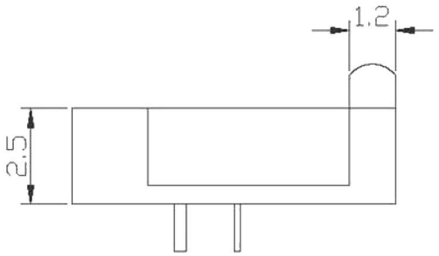

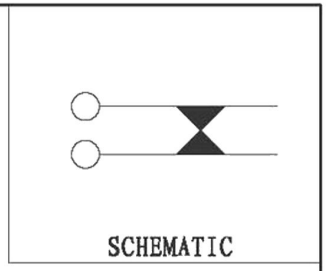

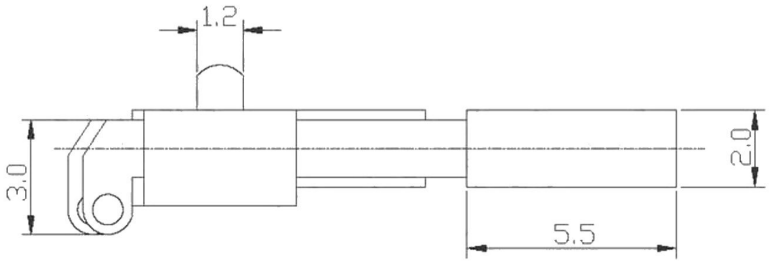

Product material
1. Blade switch
2. Base: POM/PA66
3. Terminal: Phosphorus copper
4. Contact point: Purple copper
5. Electroplating: Silver/Gold Plating
6: Temperature range for use: -10 ℃± 60 ℃
7: Current and voltage: 0.5A 12V DC
8: Operating force: 30GF ± 10GF
9: Voltage withstand: 500V 0.5mA/min
10: Insulation resistance: 100M Ω
11: Contact resistance: 30M Ω
12: Lifetime: 50000 times

The material contained in this drawing is the property of XiBang. Any use other than that speclfically authorized by XiBang i5 prohibited. The above drawing IS subjected to change for improvement without prior notice.

Switch Connector

东莞市溪榜电子有限公司
DONG GUAN XI BANG ELECTRONICS CO.,LTD

TITLE :	LEAF SWITCH				
MODEL :	LF-043				
UNIT :	MM	DWN.		DATE	
SCALE :	5 : 1	CHK'D		DATE	
VERSION		APPD.		DATE	

TOLERANCE	ANGLE TOL
<= 1.5mm ±0.1	±2°
> 1.5mm ±0.2	

NO.	PART NAME	MATERIAL	QTY.	FINISHING